ATW-T5201 Dimensions

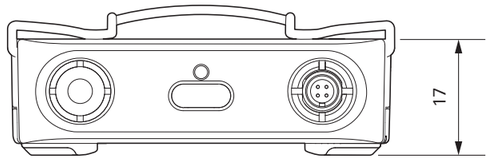

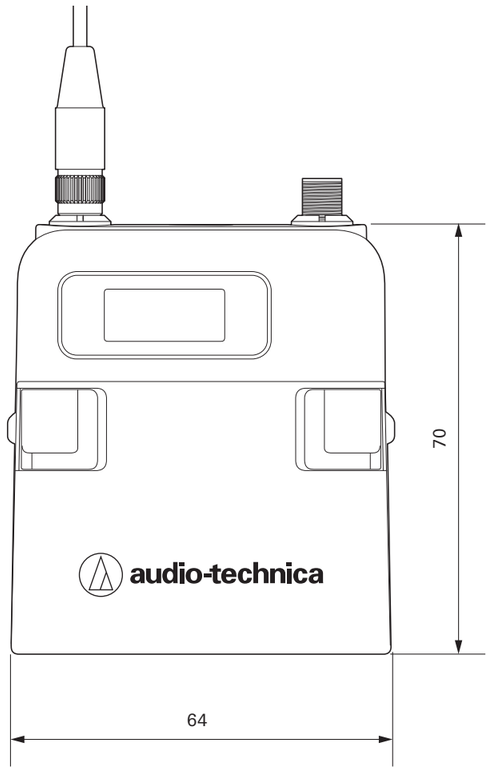

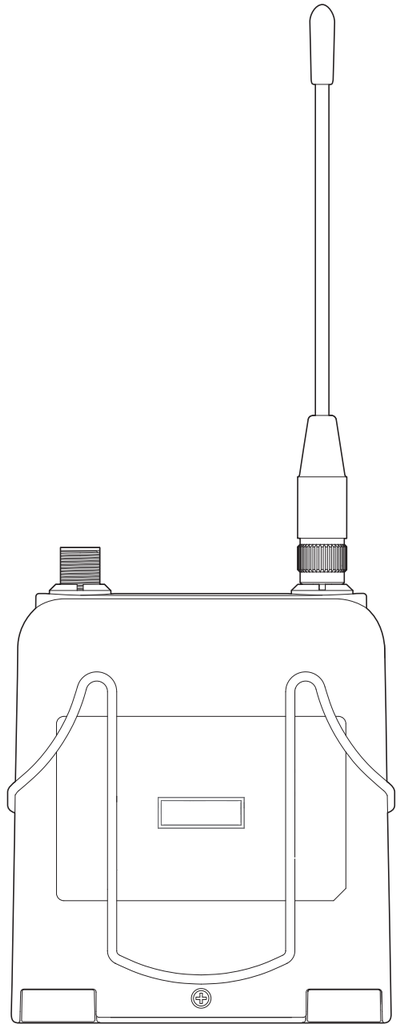

(Unit: mm)

ver.1 2018.09.01

audio-technica