ATW-R3210N Dimensions

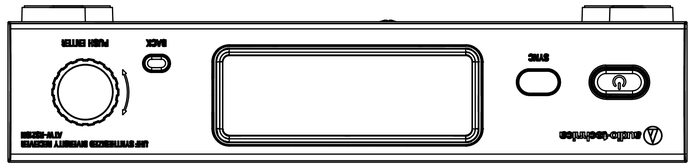

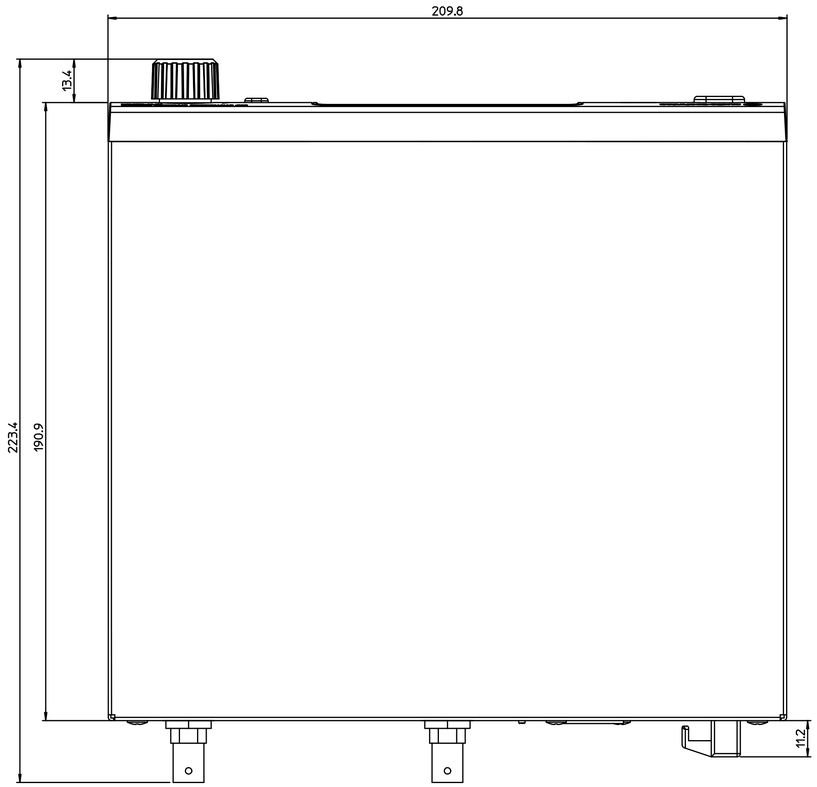

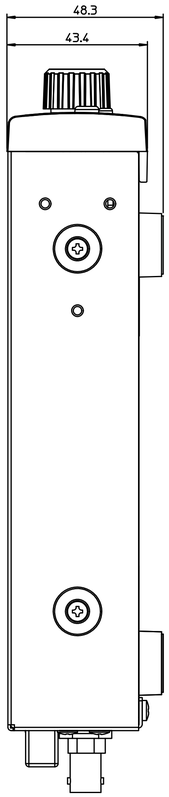

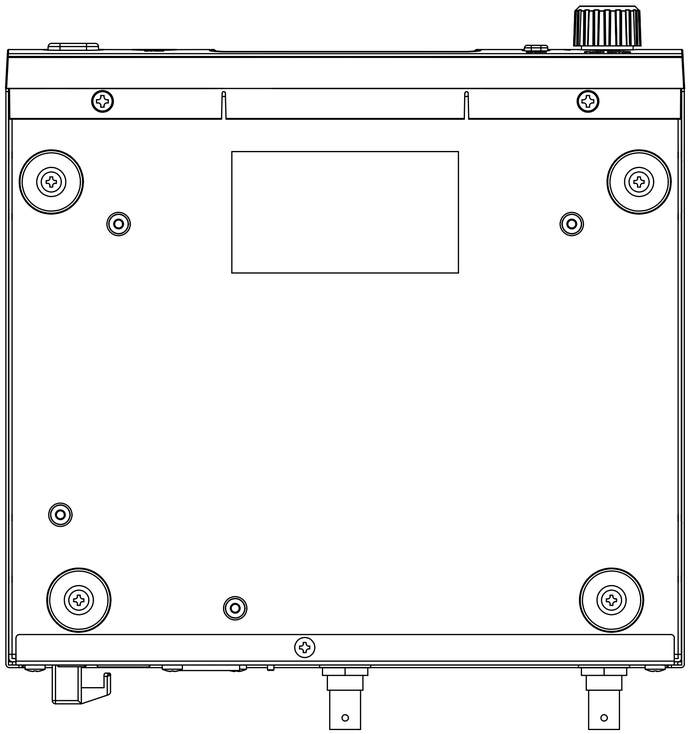

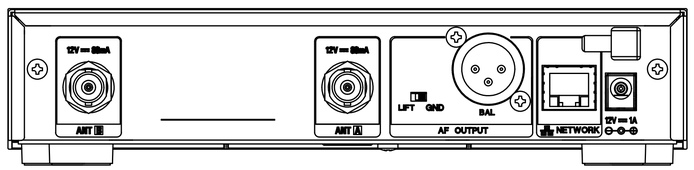

P# : 2314-00470 (Unit : mm) audio-technica